EZ MOUNTS
EZ-M6 EZ-M9

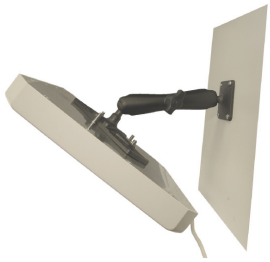

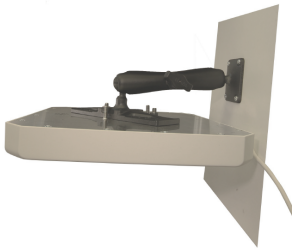

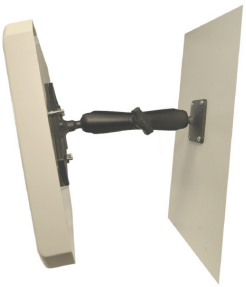

Articulating Antenna Mounting Brackets

RFMAX EZ-Series Antenna Mounts are available in 6" and 9" sizes, and utilize fully articulating arms that allow for optimal positioning of antennas for a variety of RFID

RFMAX
www.rfmax.us

Distributed internationally by:
Arcadian, Inc.
11 Muller Place
Little Falls, New Jersey, 07424 USA

888.925.5967 toll-free
973.890.2324 international
www.arcadianinc.com

EZ-M-6

- 6" Arm
- Powder Coated Aluminum

EZ-M-9

- 9" Arm
- Powder Coated Aluminum

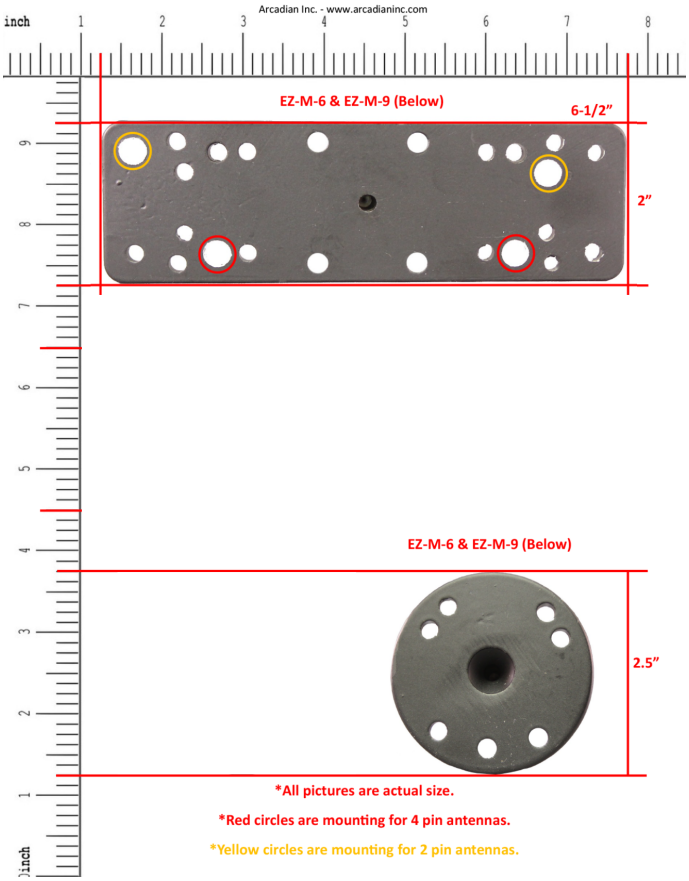

RFMAX
www.rfmax.us

Distributed internationally by:
Arcadian, Inc.
11 Muller Place
Little Falls, New Jersey, 07424 USA

888.925.5967 toll-free
973.890.2324 international
www.arcadianinc.com