Industrial Scanner
2D Reader

Versatility and high performance have been built into every feature of the MS-880, providing the flexibility to solve a multitude of bar code scanning applications, under a variety of factory conditions.

A heavy duty scanner designed for industrial automation, the MS-880 offers robust features including; wireless programming, autofocus, windows based software, linear and 2-D code reading, and multiple protocol options.

The MS-880 is the ideal scanner for any facility looking to simplify equipment purchase by selecting one scanner model for use throughout the factory floor in a variety of applications. As bar code requirements change, adjustments can quickly be made to the scanner to fit the needs of the application.

MS-880

INDUSTRIAL AUTOMATION SCANNER

Long Read Range: The MS-880 optics were designed for successful reading at extended or varying distances, such as a safety or clearance zone required around conveyor or assembly areas.

The MS-880 reads out to 90 inches (228.6 cm) on a 20 mil label.

Autofocus: This setting is part of the autocalibration feature which automatically determines and selects optimal read settings for:

- Focus
- Gain
- Tracking

Shown here with the wiring box option.

Visible Read Indicators: Visible LEDs on the MS-880 show if the labels are being successfully read, allowing line workers to check the scanner's performance instantly.

Programmable Raster: The scan area can be optimized for applications that may require:

- Reading multiple symbols
- Inconsistently placed labels
- Reading PDF417 code

Optional Wiring Box, IB-880: Flexible and easy integration are attained without special cables or connectors. See the IB-880 specification sheet for complete details.

- Pluggable relay modules
- Terminal strip connectivity
- Connectivity with hand-held scanners
- Multiple protocol communications

Integrated Industrial Protocols:

- DeviceNet
- Profibus
- Ethernet
- DataHighway Plus

Multiple Programming Methods: The MS-880 can be programmed while still on the line via a separate programming port, or the wireless IrDA port.
Four programming methods:

- ESP™-MP software (compatible with Windows 95, 98, 2000 and NT)
- Embedded menus
- Serial commands
- Bar code programming

Wireless Communications: The IrDA port allows programming via palm computers and laptops.

Bar Code Symbologies: The MS-880 reads PDF417 and AIAG formats, as well as all standard linear symbologies which include:

- Code 39
- UPC/EAN
- UCC/EAN-128
- Code 93
- Code 128
- Interleaved 2 of 5
- Codabar
- Pharma Code

Other codes are available; call Microscan more for details.

MICROSCAN®

MS-880 INDUSTRIAL AUTOMATION SCANNER

Specifications and Options

MECHANICAL

Length: 3.5" (88 mm)
Width: 5" (127 mm)
Height: 6" (152 mm)
Weight: 4 lbs. (227 g)

Side

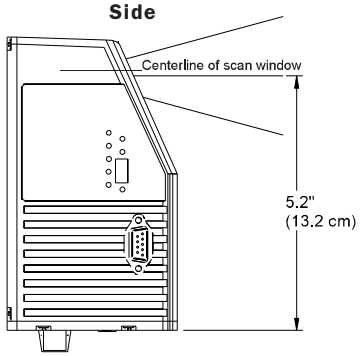

Front

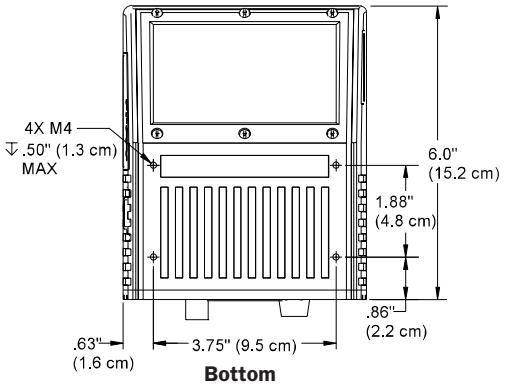

Bottom

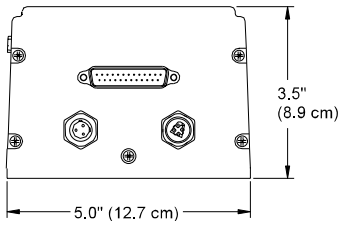

ENVIRONMENTAL

Enclosure: IP65
Operating temperature: 0° to 50°C (32° to 122°F)
Storage temperature: –50° to 75°C (–63° to 167°F)
Humidity: Up to 90% (non-condensing)

LASER LIGHT

Type: Semiconductor visible laser diode (650 nm nominal)
Operating life: 50,000 hours @ 25°C (77° F)
Safety class: CDRH Class II

SCANNING PARAMETERS

Scanner mirror type: Rotating, single line, 14-faceted mirror
Scan rate: Adjustable from 400 to 1000 scans/second (default = 500 sps)
Raster Sweep Speed: *1 to 10 sweeps per second*
Raster Sweep Angle: 30° maximum
Scan Width Angle: Typically 60°
Pitch Angle: ±50° maximum
Skew Angle: ±40° maximum
Label contrast: 25% min. absolute dark to light differential at 650 nm wavelength

READ RANGES[1]

Label Size	Scanning Distance
7.5 mil (.190 mm)	10" to 35" (25.4 to 88.9 cm)
10 mil (.254 mm)	10" to 44" (25.4 to 111.8 cm)
15 mil (.381 mm)	10" to 74" (25.4 to 188 cm)
20 mil (.508 mm)	10" to 90" (25.4 to 228.6 cm)
30 mil (.762 mm)	10" to 100" (25.4 to 254 cm)
40 mil (1.020 mm)	10" to 110" (25.4 to 279.4 cm)
50 mil (1.27 mm)	10" to 120" (25.4 to 304.8 cm)

[1] Readings are using a Code 39 grade A label

CONNECTORS/PIN ASSIGNMENTS

Program Connector: *9-pin D-subminiature plug*

Pin No.	Function
2	RX232
3	TX232
5	Signal ground
9	Boot mode

Power Connector: *3-pin MicroChange*

Pin No.	Function
1	Power ground
2	NC
3	Power 10 to 28 VDC (in)

Trigger Connector: *4-pin MicroChange*

Pin No.	Function
1	Power 10 to 28 VDC (out)
2	NPN
3	Ground
4	N/C

Host Connector: 25-pin D-subminiature plug

Pin No.	Host RS232	Host & Aux RS232	Host RS422/485	In/ Out
1	Chassis ground			
2	Host TxD			Out
3	Host RxD			In
4	RTS	Aux TxD		Out
5	CTS	Aux RxD		In
6	Output 1 (+)			Out
7	Signal Ground			
8	Output 2 (+)			Out
9	Trigger (–)			In
10	Trigger (+)			In
11	Default configuration			In
12	Input 1 (+)			In
13			RxD (+)	In
14			TxD (–)	Out
15	Noread/Output 3 (+)			Out
16			RxD (–)	In
17	Power Ground			In
18	Power +10 to 28 VDC			In
19			TXD +	Out
20	Output 1 (–)			Out
21	Output 2 (–)			Out
22	Noread/Output 3 (–)			Out
23	Input 1 (–)			In
24	New master (–)			In
25	New master (+)			In

COMMUNICATION

Interface: RS-232, RS-422/485, IrDA port, Daisychain/auxiliary port capable.
***Interface with IB-880 Wiring Box* (optional):** DeviceNet, Profibus, Ethernet or Data Highway Plus

CODE TYPES

Standard codes: Code 39, Code 128, UPC/EAN, Interleaved 2 of 5, Codabar, Code 93, PDF417, Pharma Code.
Applications Standard: AIAG, UCC/EAN-128

ELECTRICAL

Power Requirement: Input, 10-28 VDC, 200 mV p-p max. ripple, 230mA at 24 VDC (typ.)

EMISSIONS

EN55022: 1998 Limits & Methods: ITE Disturbances (radiated and conducted)
EN55024: 1998 (General Immunity: Residential)
EN61000-6-2: 1999 (Heavy Industrial: Immunity)

INDICATORS

Beeper: Good read, match/mismatch, noread, serial command confirmation

LEDs: 1 status, 1 power, 5 read performance (representing percentage of good decodes)

DISCRETE I/O

Trigger, New Master, Input 1: Optoisolated, 5-28V rated, (12mA at 24 VDC)
Outputs (1, 2, 3): Opto-isolated, 10–28V rated, (I_{CE}<100 mA @ 24 VDC, current limited by user)

SAFETY CERTIFICATIONS

Designed for FCC, CDRH, CE, UL/cUL, TüV, BSMI

ISO 9001/Cert. No. 00-1047

Product specifications are given for typical performance at 25°C (77°F) using grade A labels. Some performance characteristics may vary at high temperatures or other environmental extremes.

MICROSCAN®

Microscan Systems, Inc.
Tel 425 226 5700 / 800 251 7711
Fax 425 226 8250
Microscan Europe
Tel 31 172 423360 / Fax 31 172 423366
Microscan Asia Pacific R.O.
Tel 65 846 1214 / Fax 65 846 4641

Part of a full range of sales tools available from our web site:
www.microscan.com
E-mail: helpdesk@microscan.com